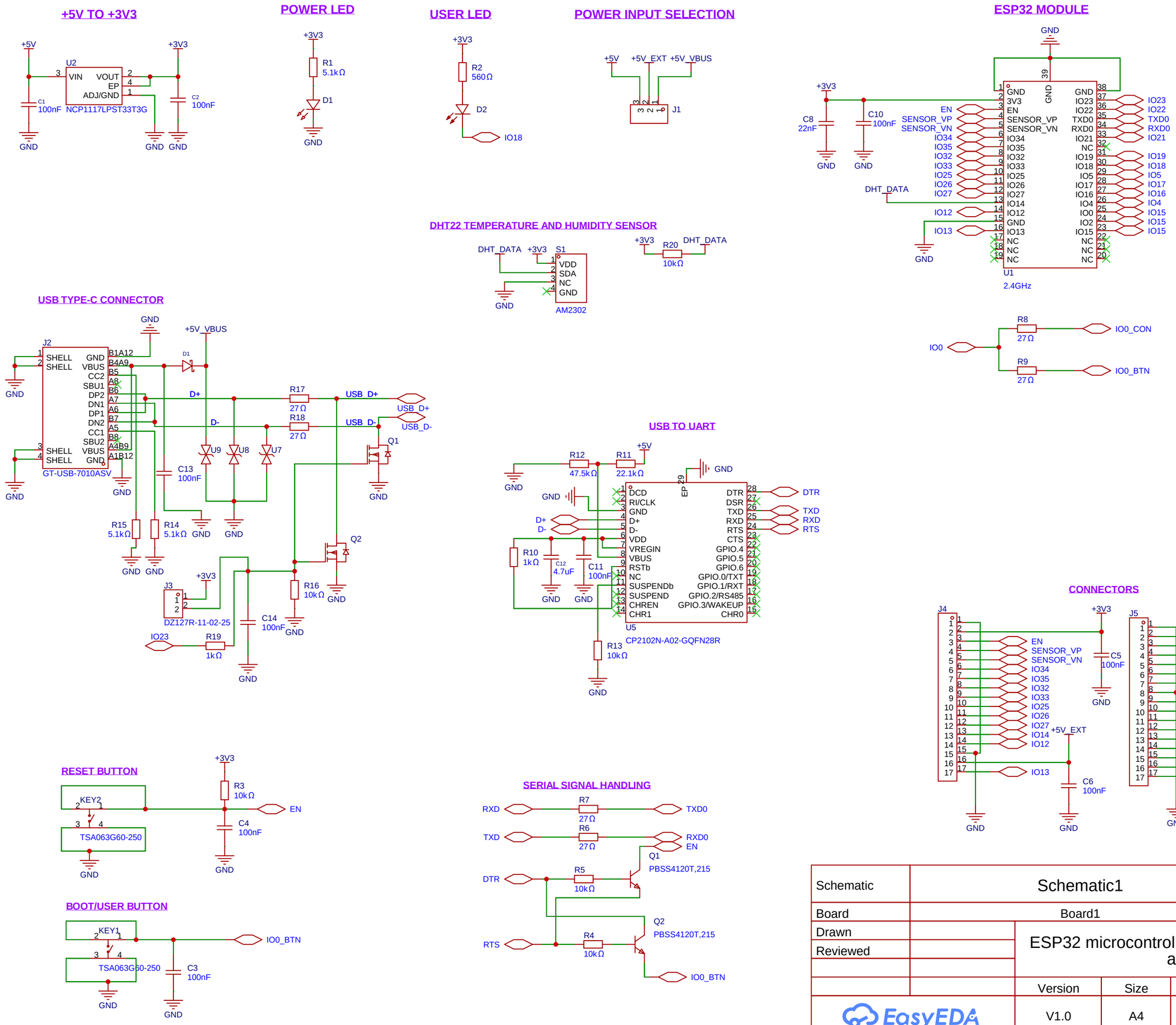

Schematic	Schematic1	Create at	2026-05-07
		Update at	2026-05-12
Board	Board1	Page	P1
Drawn	ESP32 microcontroller connected to a DHT22 temperature and humidity sensor		
Reviewed			
	Version	Size	Page 1 Total 1
EasyEDA	V1.0	A4	164994 - Ndinya Bright Seya